All information is copyright of allen ©

A4471

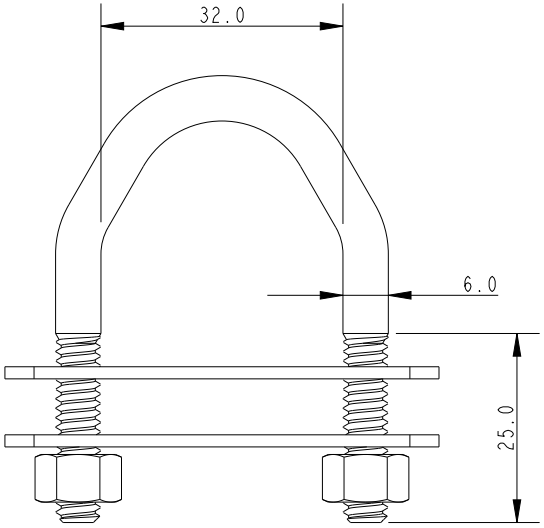

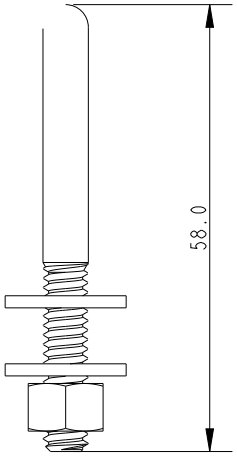

SCALE 1:1

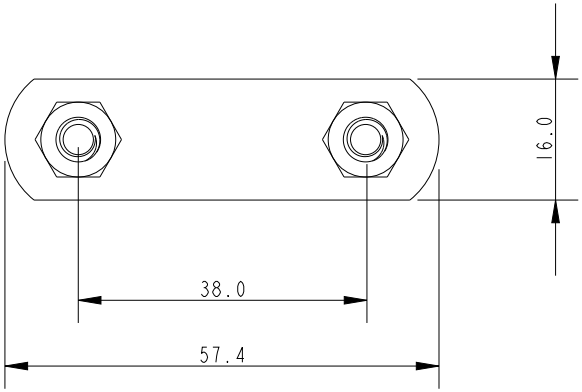

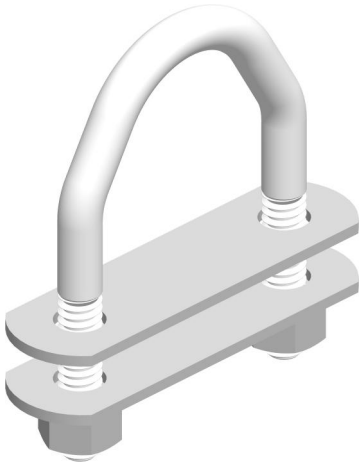

Specification					
Rod Size mm	Fixing Hole Centre mm	Height mm	Thread Length kg	Weight g	Inside Dia. mm
6	38	58	25	54	32

DIMENSIONS FOR REFERENCE ONLY

allenbrothers.co.uk
+44(0)1621 772477

Title	Description
A4471-REF	U Bolt With Top & Bottom Backing Plate